NYTOP®

Rock Sliders Installation Guide

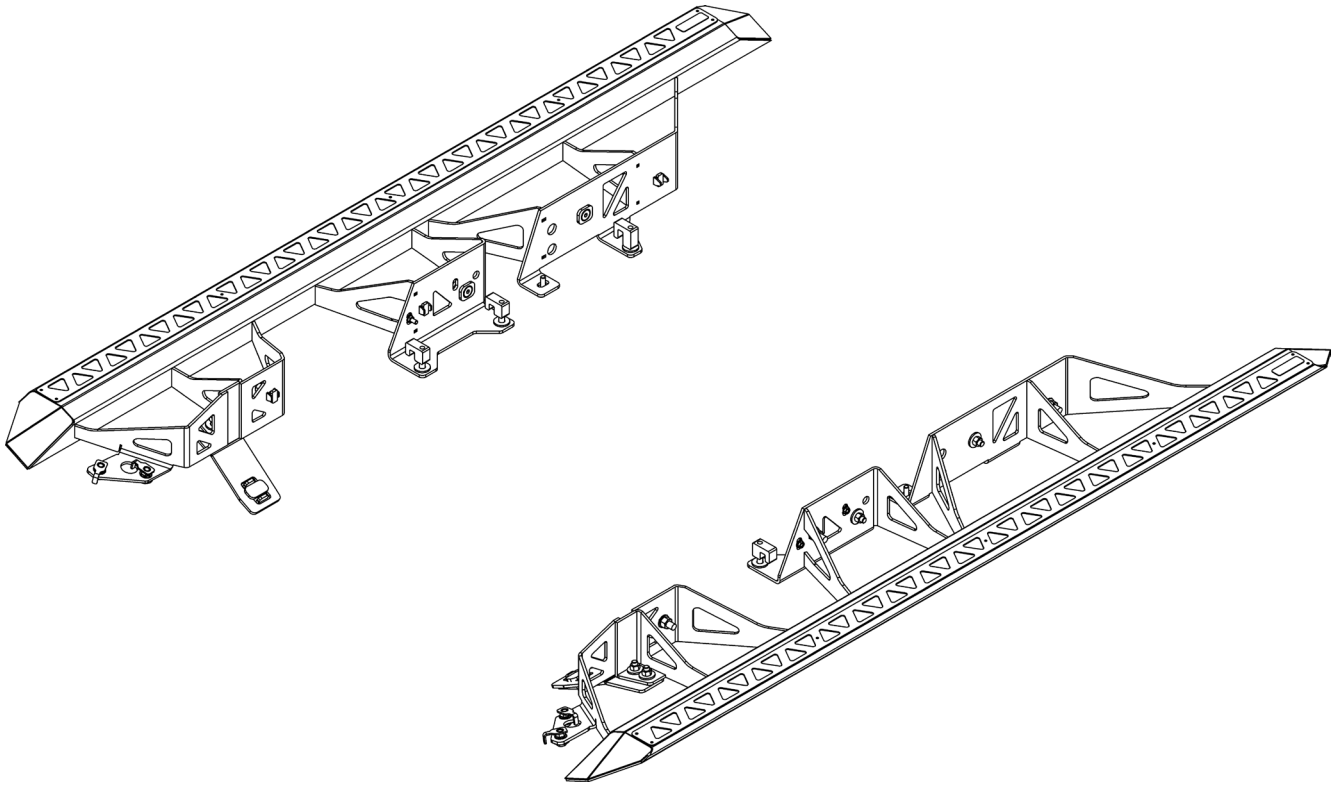

TM-D / TM-DL
Weight: 185 lbs / 207 lbs.

Compatible Models:
2016-2023 Toyota Tacoma

Included hardware:

M14x50mm Hammer Bolt

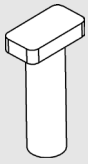

x 6

M14 Washer



x 6

M14 Nut



x 6

M12x35mm Hammer Bolt



x 2

M12x50mm Hex Head Screw

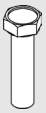

x 6

M12x40mm Hex Head Screw



x 4

M12x25mm Hex Head Screw



x 4

M12x40mm Countersunk Screw

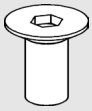

x 4

M12 Countersunk Washer



x 4

M12 Washer



x 30

M12 Nut



x 10

M12 Tab Nut



x 2

M8x30mm Hex Head Screw



x 2

M8 Flange Nut



x 2

M8x28mm Flat Washer



x 2

Small Clamping Block



x 4

Large Clamping Block



x 2

AWD Lower Bracket



x 2

AWD Upper Bracket

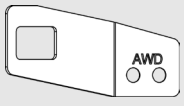

x 2

For RWD models, please email us to request a special mounting bracket required for proper fitment.


NYTOP
NYTOP
NYTOP
NYTOP
NYTOP
NYTOP
NYTOP
?
NYTOP
NYTOP

M14 Hammer Bolt

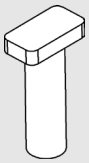

x 3

M14 Washer



x 3

M14 Nut



x 3

Prepare the frame for installation by removing the clips, covers, bolts, brackets, and tucking the wiring harness up. Keep all OEM hardware, it will be reinstalled later on. Prepare the rock slider by inserting three M14 hammer bolts, washers, and nuts. Hand tighten the bolts so they sit on the tabs and will not rotate during installation.

Starting with the driver's side, position the rock slider onto the frame, loosen the hammer bolts, and rotate them 90 degrees so the hammer bolts sit between the tabs. Once the hammer bolts are seated, hand tighten the bolts.

The guide will refer to the individual brackets by the numbering on this page.

Short Bed - Driver's Side

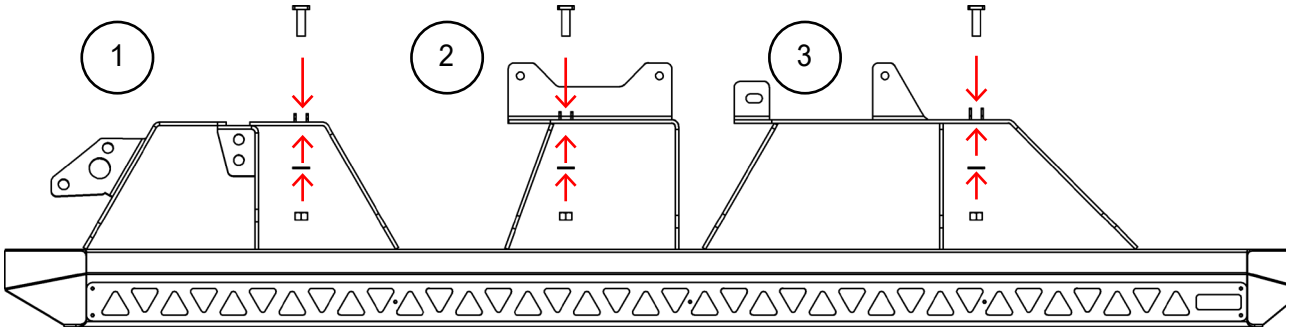

Long Bed - Driver's Side

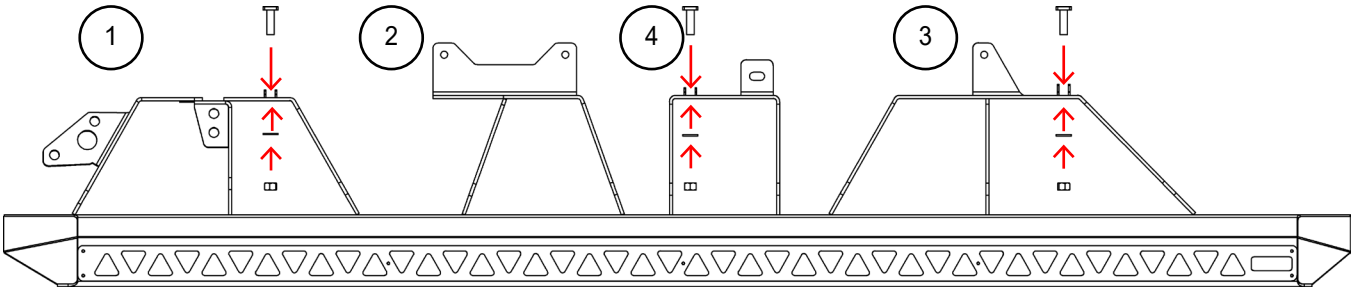



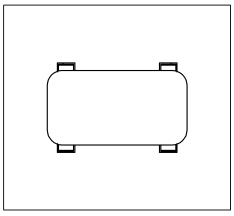

Hammer bolt position during preparation

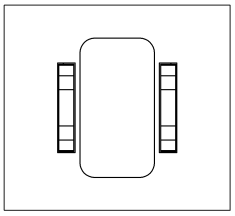

Hammer bolt position after installation

M12 Countersunk Bolt	Countersunk Washer	M12 Washer	M12 Nut
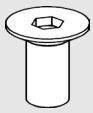 x 2	 x 2	 x 2	 x 2

From the inner side of the frame, install two countersunk washers and bolts, followed by the washers and nuts. Pay attention and make sure components such as brake lines are clear and out of the way before hand tightening the bolts.

For the long bed rock slider, only bracket 3 will require one countersunk bolt and washer per side.

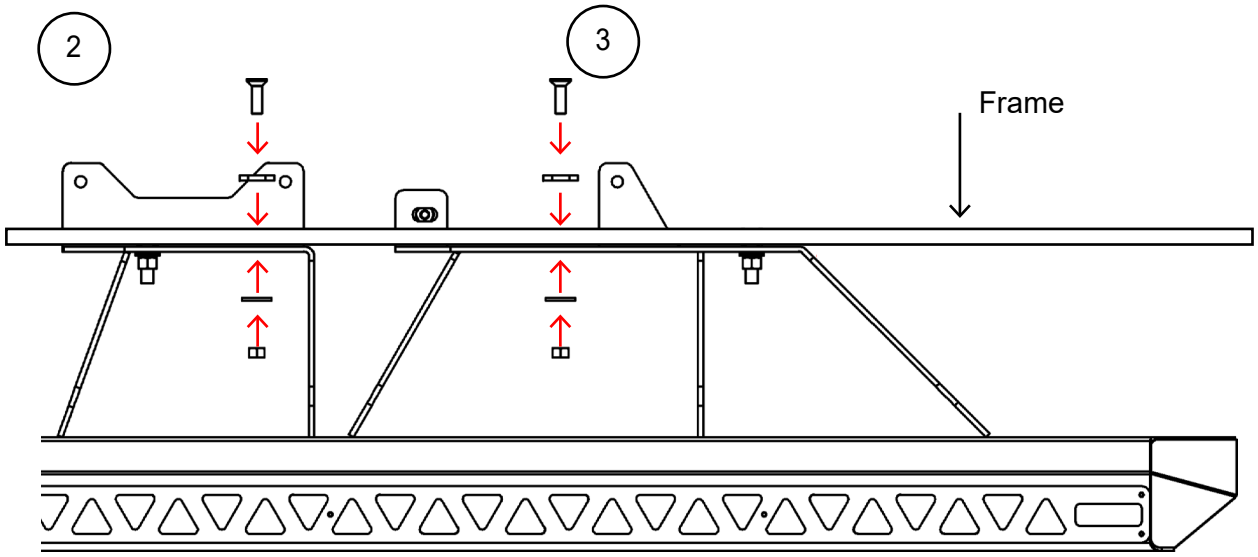



Factory M10 Flange Bolt
(not included)

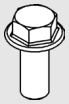 x 1

Reinstall the previously removed OEM M10 flange bolt onto bracket 3.

For the long bed rock sliders, install onto bracket 4.

Leave the bolt hand-tight.

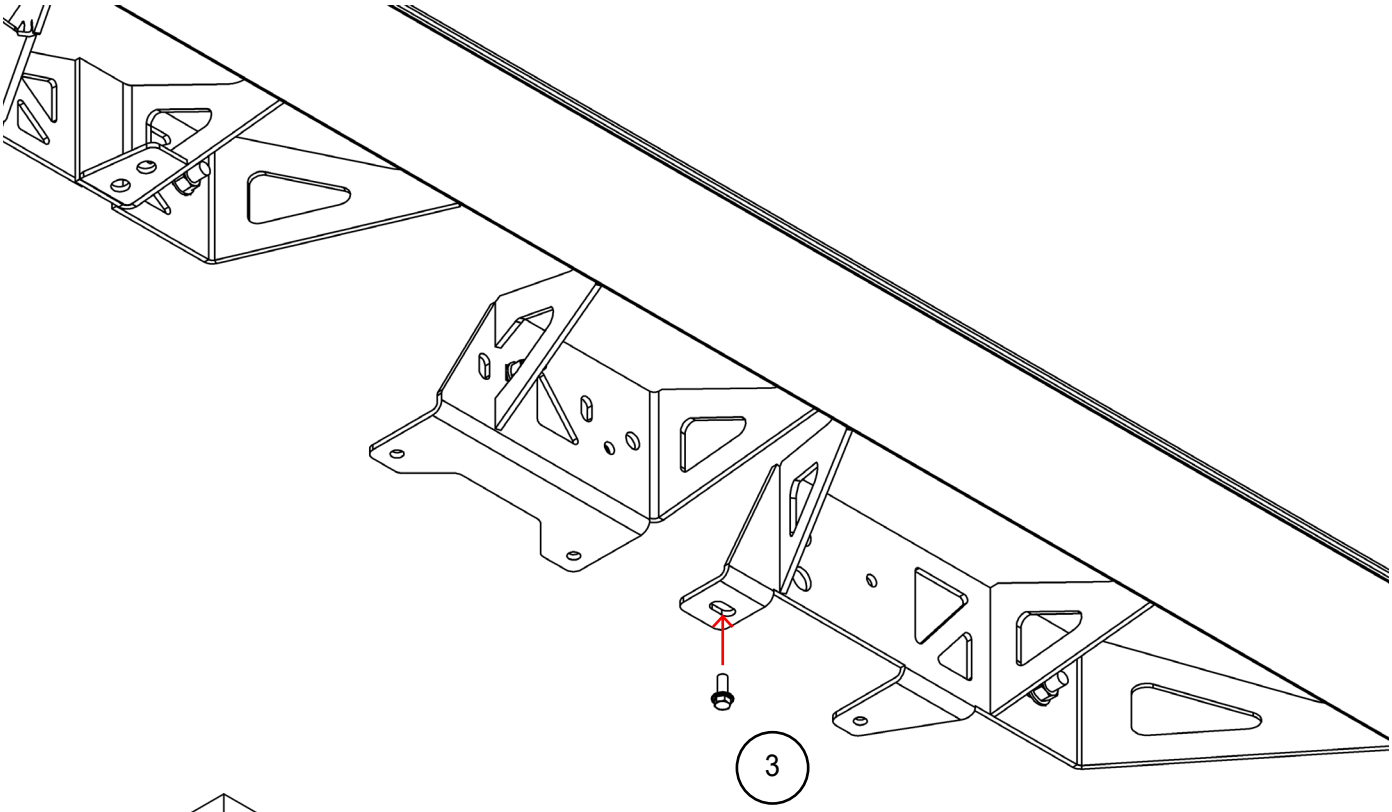

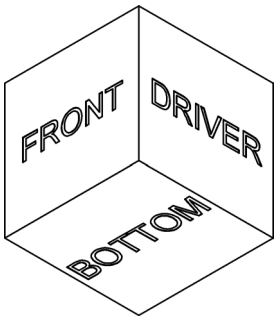

Small Clamping Block	Large Clamping Block	M12x50mm Bolt	M12 Washer
x 2	x 1	x 6	x 6

Install the two small clamping blocks, and one large clamping block using the M12x50mm bolts with a washer on either side of the bracket. If there is an excessive gap between the clamping blocks and the brackets due to variations in the frame, adjust the gap with the additional M12 washers provided.

For both the short bed and long bed rock sliders, the small clamping blocks are installed onto bracket 2 and the large clamping block is installed onto bracket 3.

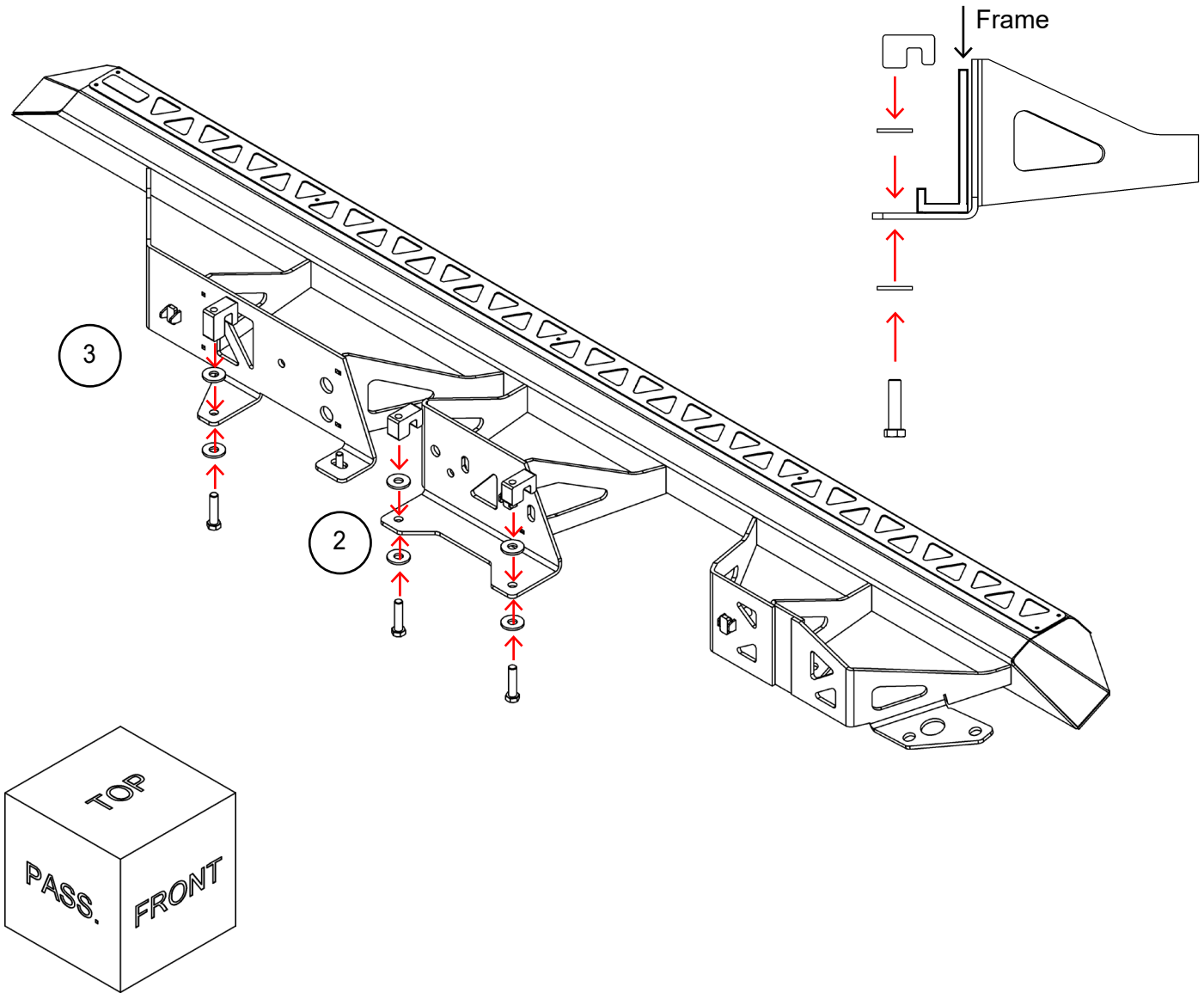

M12x40mm Bolt	M12 Washer	M12 Nut	AWD Upper Bracket
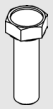 x 2	 x 4	 x 2	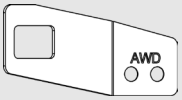 x 1

Install the AWD bracket with the two M12x40mm bolts with washers on either side, and the M12 nuts. Leave the bracket loose, as adjustments will need to be made in the next step.

For a rear wheel drive model, follow the same process as above but ensure the additional spacer plate is sandwiched between the brackets.

For RWD models, please email us to request a special mounting bracket required for proper fitment.

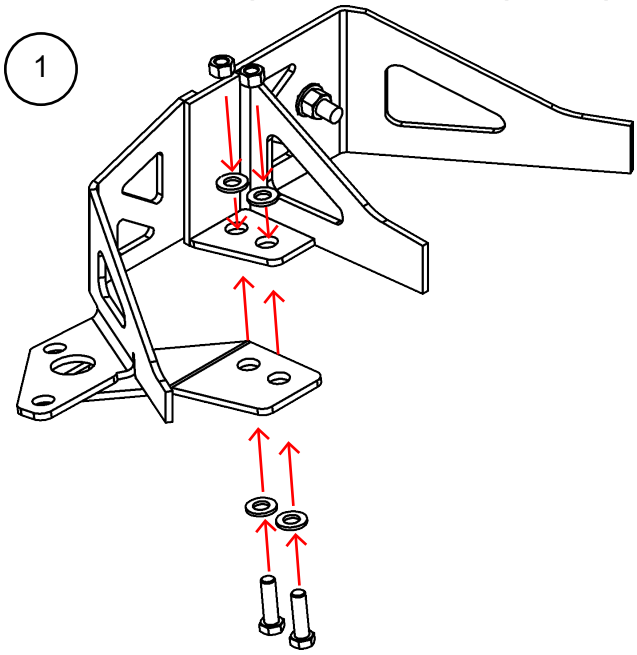

AWD

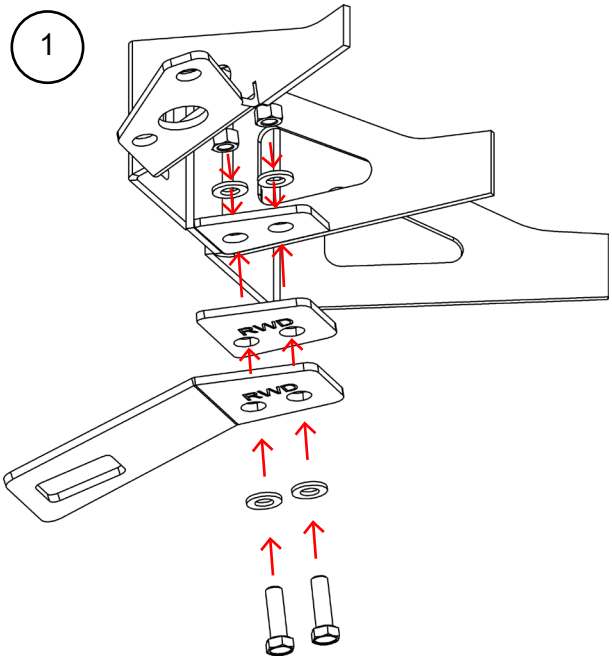

RWD

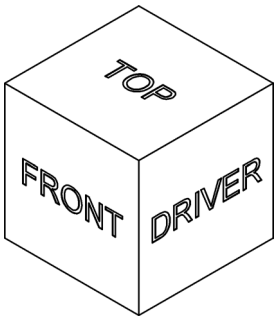

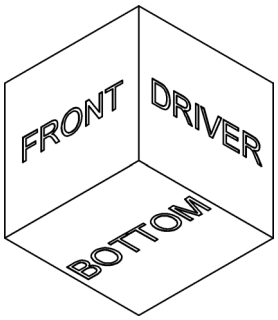

AWD Lower Bracket	M12x35mm Hammer Bolt	M12 Washer	M12 Nut
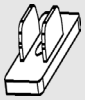 x 1	 x 1	 x 1	 x 1

Place the M12 hammer bolt on the tabs of the AWD lower bracket and hand tighten it.

Insert the AWD lower bracket through the rectangular cutout in the AWD upper bracket and the corresponding hole in the frame.

Loosen and twist the hammer bolt to allow it to sit between the tabs and hand tighten. The loose portion of the AWD upper bracket from the previous step can now be hand tightened as well.

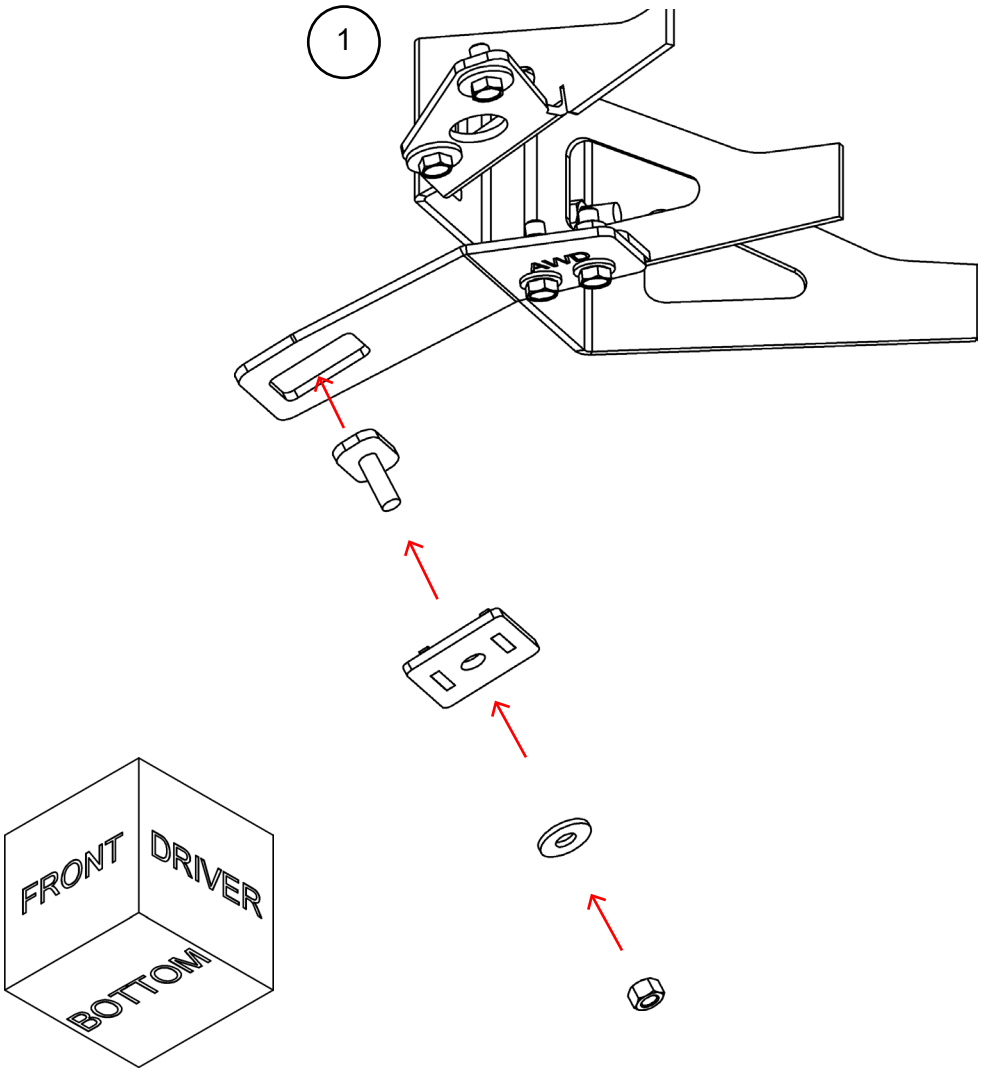

Tab Nut	M12x25mm Bolt	M12 Washer
 x 2	 x 2	 x 2

Slide the two tab nuts through the holes near the body mount bracket. Use the tabs to position the nuts so that the two M12 bolts can be tightened. Make sure the tabs will catch the edges of the holes once the bolts start being tightened. Use an M12 washer underneath the head of each bolt and leave the bolts hand-tight.

Reinstall the module with the OEM M8 flange nuts as well as all clips and brackets that have been removed.

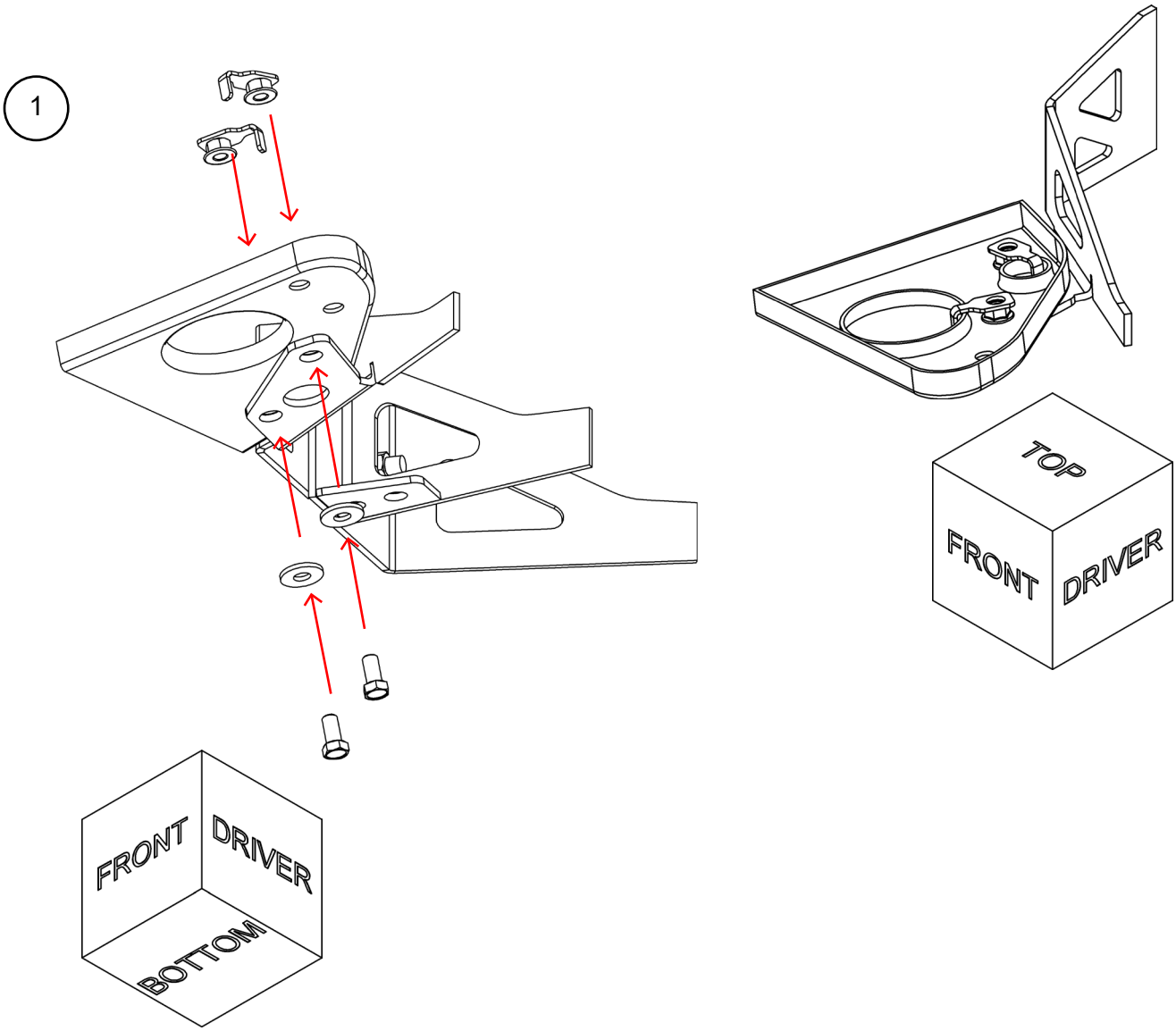

M8x30mm Bolt	M8 Washer	M8 Flange Nut
x 1	x 1	x 1

Repeat the steps for the passenger side. In addition, install the M8 bolt, washer, and flange nut on bracket 2.

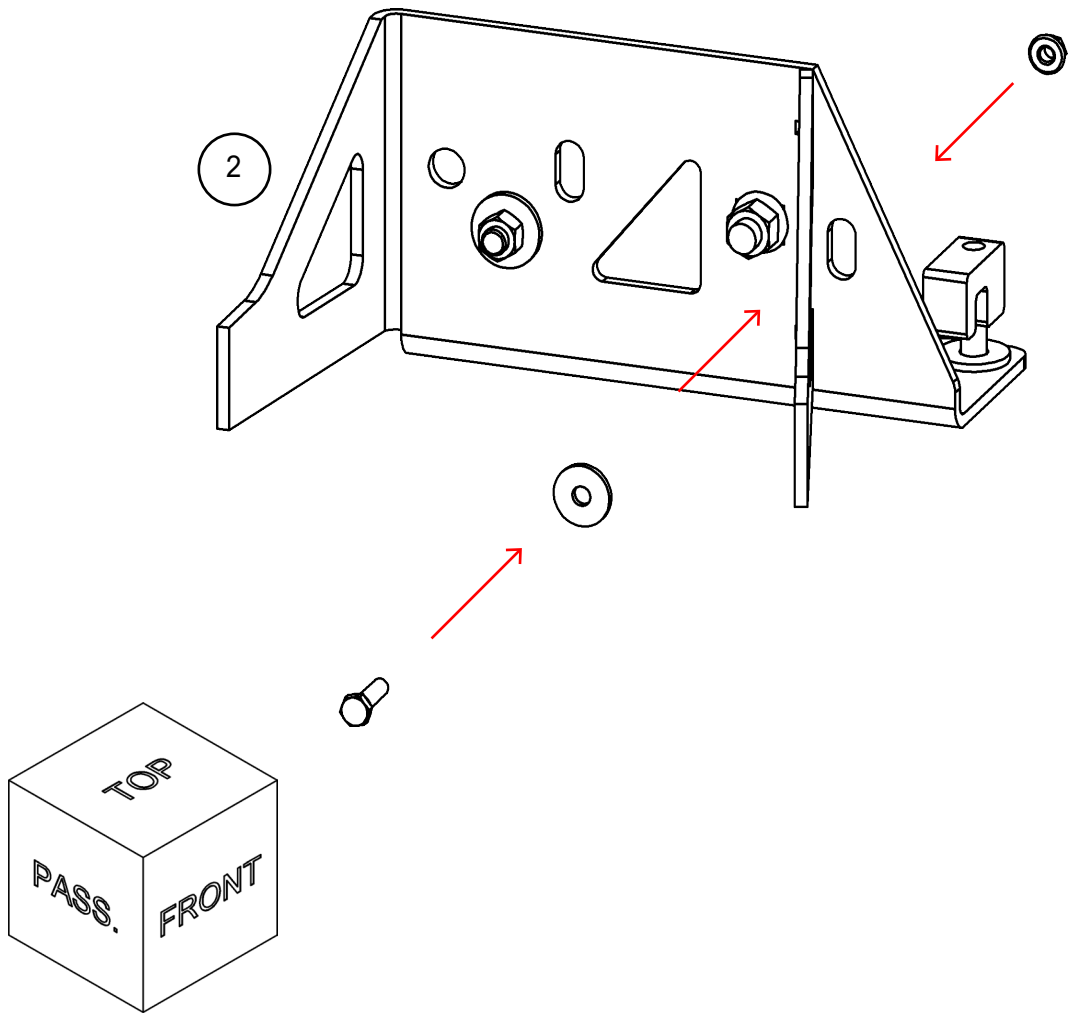

Adjust the positioning of the rock slider as necessary.

Torque the bolts to the following specifications.

M6 Bolts: 10 ft-lbs / 13.5 N-m
M8 Bolts: 21 ft-lbs / 29 N-m
M10 Bolts: 35 ft-lbs / 47.5 N-m
M12 Bolts: to 48 ft-lbs / 65 N-m
M14 Bolts: to 105 ft-lbs / 142 N-m

